Taurus Series

MT Fixed Speed Scroll Condensing Units

Customer Values

- R404A refrigerant provided
- Multiple models available, 1.5-15HP
- Highly energy efficient, low noise
- Condensing coils with high cooling capacity, suitable for 48°C ambient temperature applications, with -30°C as an option, to meet various customer needs
- Stable oil return, reliable running
- With 485 communication systems for remote monitoring

Product Features

- Advanced microprocessor-based control system, automatic adjustment according to load changes
- Two-speed fan motor, automatically switching according to ambient temperature and terminal load
- Large coil design, strong heat exchange, suitable for extreme conditions
- Hermetic and sound insulated cabinet, quiet running

Naming Rule of Fixed Speed Condensing Units

GQ H 015 P S 4 XXX

- XXX: Internal Design Serial Number
- 4: Form of Power Supply (Allowable Voltage Fluctuation Range±10%)
  - 4.380-400V/3PH/50Hz
  - 5.230V/1PH/50Hz
- S: Number of Compressor
  - S-Single Compressor
  - D-Double Compressors
- P: Type of Refrigerant
  - H-AB Alkylbenzene Oil
  - P-Ester (Ether) Oil
- 015: Nominal Capacity of Unit, kBtu/h@60Hz, ARI
- H: Application Temperature of Unit
  - H – Medium Temperature
  - L – Low Temperature
- GQ: Hermetic Air-cooled Compressor Condensing Unit - Quietor Series

* All comparisons are based on the product performances of last generation.

Medium Temperature Working Conditions (<7HP) 380V/3PH/50Hz

GQH			015PS	021PS	026PS	030PS	038PS	045PS	048PS
Refrigerant			R404A						
Casing Type			M1	M1	M1	M1	M2	M2	M2
R404A	Nominal Cooling Capacity (1)	kW	4.15	5.57	6.28	8.06	10.16	12.08	13.03
	Nominal Input Power (1)	kW	1.58	2.24	2.64	3.37	3.86	4.71	5.09
R22	Nominal Cooling Capacity (1)	kW	3.74	5.01	5.65	7.25	9.64	11.42	12.52
	Nominal Input Power (1)	kW	1.42	2.02	2.38	3.03	3.40	4.08	4.48
Compressor	Quantity		1	1	1	1	1	1	1
	Model		MLZ015T4	MLZ021T4/	MLZ026T4	MLZ030T4	MLZ038T4	MLZ045T4	MLZ048T4
	Nominal Power	HP	1x2	1x3	1x3.5	1x4	1x5	1x6	1x7
Crankcase Heating Belt	Quantity x Power	W	1 x 65	1 x 65	1 x 65	1 X 75	1 X 75	1 X 75	1 X 75
Noise	dB (A) (2)		60	60	60	60	60	60	60
Fan Motor	Quantity x Diameter	mm	1x0500	1x0500	1x0500	1x0500	2x0500	2x0500	2x0500
	Air Volume	m^3/h	4445	4445	4445	4445	8890	8890	8890
Total Current	Fan Nominal Current	A	0.71	0.71	0.71	0.71	1.42	1.42	1.42
	Compressor Starting current	A	30	45	45	60	70	82	87
	Compressor Max. Continuous Current	A	7	9.5	11	13	15	15	16
Reservoir Volume		L	6	6	6	6	7.6	7.6	7.6
Lubricating Oil			Ester oil 320HV(R404A))						
Oil Charge		L	1.1	1.1	1.6	1.6	1.6	1.6	1.6
Connection	Gas Return	inch	5/8"	5/8"	5/8"	5/8"	3/4"	3/4"	3/4"
	Liquid Line	inch	1/2"	1/2"	1/2"	1/2"	1/2"	1/2"	1/2"
Dimension		mm	Please see the pictures attached						
Weight		kg	68	68	68	74	125	125	125

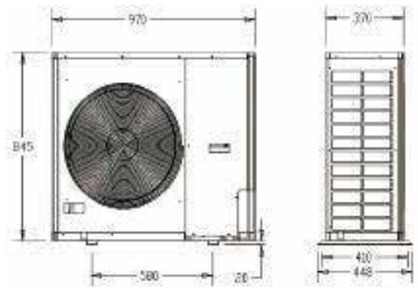

M1

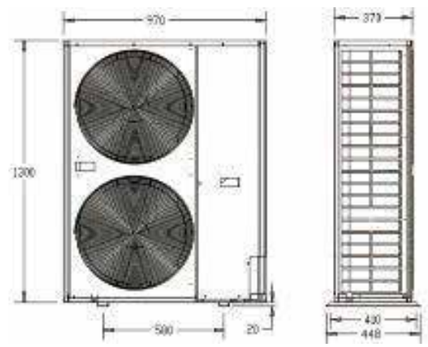

M2

Model Selection Table of Medium Temperature Fixed Speed CDU (<7HP)
230V/1PH/50Hz&380V/3PH/50Hz

	R22	Ambient Temperature							
		27 ° C		32 ° C		37 ° C		42 ° C	
	GQH	Cooling Capacity Q (kW)	Power Consumption P (kW)	Cooling Capacity Q (kW)	Power Consumption P (kW)	Cooling Capacity Q (kW)	Power Consumption P (kW)	Cooling Capacity Q (kW)	Power Consumption P (kW)
SST -15 °C	015PS	3.07	1.48	2.82	1.67	2.56	1.86	2.26	2.07
	021PS	4.23	1.91	3.89	2.14	3.59	2.35	3.23	2.60
	026PS	5.13	2.48	4.70	2.74	4.36	2.98	3.91	3.28
	030PS	6.00	2.99	5.62	3.23	5.10	3.56	5.06	3.92
	038PS	7.70	3.39	7.08	3.76	6.54	4.12	5.89	4.55
	045PS	9.01	4.16	8.26	4.61	7.64	5.04	6.86	5.57
	048PS	9.73	4.52	8.93	5.00	8.26	5.45	7.42	6.01
SST -10 °C	015PS	3.83	1.43	3.51	1.63	3.22	1.83	2.88	2.05
	021PS	5.13	1.98	4.73	2.22	4.41	2.43	3.99	2.69
	026PS	6.21	2.54	5.84	2.75	5.33	3.04	4.81	3.34
	030PS	7.23	3.10	6.82	3.34	6.21	3.67	5.59	4.03
	038PS	9.36	3.48	8.64	3.84	8.04	4.20	7.28	4.63
	045PS	10.94	4.28	10.07	4.74	9.37	5.16	8.46	5.69
	048PS	11.77	4.66	11.07	5.06	10.11	5.58	9.13	6.14
SST -7 °C	015PS	4.33	1.39	4.15	1.58	3.68	1.79	3.31	2.02
	021PS	5.75	2.03	5.57	2.24	4.96	2.48	4.50	2.75
	026PS	6.94	2.59	6.28	2.64	6.00	3.08	5.42	3.38
	030PS	8.21	3.13	8.06	3.37	6.96	3.74	6.28	4.10
	038PS	10.48	3.53	10.16	3.86	9.06	4.26	8.23	4.69
	045PS	12.24	4.38	12.08	4.71	10.55	5.24	9.55	5.77
	048PS	13.16	4.75	13.03	5.09	11.37	5.66	10.29	6.23
SST -5 °C	015PS	4.66	1.37	4.29	1.57	3.98	1.77	3.59	2.00
	021PS	6.16	2.06	5.81	2.26	5.33	2.51	4.84	2.78
	026PS	7.42	2.62	7.02	2.82	6.44	3.10	5.83	3.41
	030PS	8.86	3.15	8.17	3.46	7.46	3.79	6.74	4.15
	038PS	11.23	3.57	10.41	3.94	9.74	4.29	8.86	4.72
	045PS	13.11	4.44	12.37	4.80	11.34	5.29	10.28	5.83
	048PS	14.08	4.81	13.31	5.20	12.20	5.72	11.06	6.29
SST 0 °C	015PS	5.60	1.30	5.18	1.50	4.83	1.70	4.39	1.94
	021PS	7.30	2.15	6.92	2.34	6.37	2.60	5.81	2.87
	026PS	8.77	2.71	8.34	2.90	7.67	3.18	6.97	3.49
	030PS	10.47	3.27	9.67	3.60	8.86	3.93	8.01	4.30
	038PS	13.34	3.69	12.64	4.00	11.66	4.39	10.65	4.83
	045PS	15.56	4.61	14.75	4.96	13.55	5.45	12.32	5.98
	048PS	16.65	5.00	15.82	5.36	14.55	5.89	13.22	6.46

Testing conditions: refrigerant R404A, degree of superheat of gas return 10K

MT Fixed Speed Scroll Condensing Units (>7HP)

GQH				066PS	076PD	090PD	096PD
Refrigerant				R404A			
Casing Type				M5	M6	M6	M6
Nominal Cooling Capacity		(1)	kW	18.58	20.32	23.82	26.27
Nominal Input Power		(1)	kW	8.17	9.22	10.42	11.84
Compressor	Quantity			1	2	2	2
	Model			ZB66 KQE	ZB38 KQE	ZB45 KQE	ZB48 KQE
	Nominal Power		HP	1x9	2x6	2x7	2x8
Crankcase Heating Belt	Quantity x Power		W	1x90	2x75	2x75	2x75
Noise		(2)	dB(A)	65	64	64	66
Fan Motor	Quantity x Diameter		mm	2xØ500	2xØ500	2xØ500	2xØ500
	Air Volume		m^3/h	10400	10400	10400	10400
Total Current	Fan Nominal Current	(3)	A	1.38	1.38	1.38	1.38
	Compressor Starting Current		A	111	65.5*2	74*2	101*2
	Compressor Max. Continuous Current		A	17.3	10*2	11.5*2	12.1*2
Reservoir Volume			dm^3	14	19	19	23
Connection	Gas Return		inch	1"3/8	1"3/8	1"3/8	1"3/8
	Liquid Line		inch	5/8"	5/8"	5/8"	7/8"
Dimension	Length	L	mm	1166	1440	1440	1440
	Wide	P	mm	604	754	754	754
		P1	mm	556	706	706	706
	Height	H	mm	1226	1226	1226	1226
	Fixing Feet	E	mm	650	934	934	934
		F	mm	650	800	800	800
		F1	mm	590	740	740	740
Weight			kg	210	232	266	310

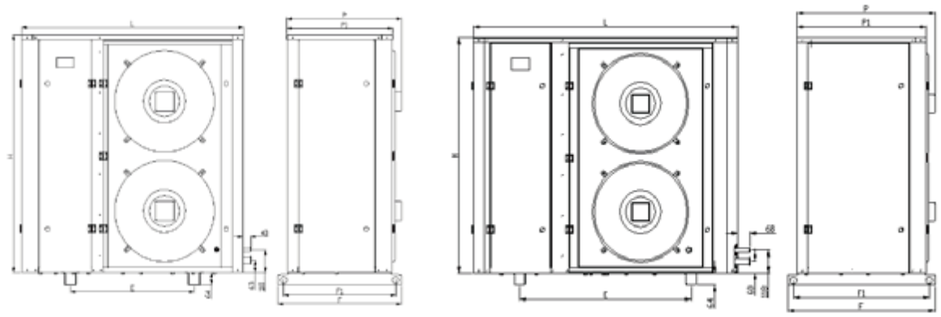

(1) Testing conditions of nominal cooling capacity and nominal power: National standard medium temperature working conditions SST -7°C, ambient temperature 32°C, gas return temperature 18°C.
(2) The COL low ring temperature series crankcase heating tape is twice as powerful as the standard model cranking power.
(3) Noise measurement standard: dB(A)@1m,different operating environment may lead to different noise values. Affected by wall sound reflection and other factors may lead to differences between measured values and nominal values at the installation field. Acoustic attenuation due to distance only exists in theory. Sound reflection and resonance may lead to different results of measurement, including total noise and frequency.

Note: All data and images are for reference only and Carrier reserves the right to make changes without prior notice.

MT Fixed Speed Scroll Condensing Units (>7HP)

	Model	Horse Power	Ambient Temperature									
			27 ° C		32 ° C		38 ° C		43 ° C		48 ° C	
		HP	Q(kW)	P (kW)	Q(kW)	P (kW)	Q(kW)	P (kW)	Q(kW)	P (kW)	Q(kW)	P (kW)
SST -20 °C	GQH066PS4COX	9	12.20	5.51	11.09	6.08	10.19	7.16	9.27	8.14	7.93	8.57
	GQH076PD4COX	12	14.46	6.59	14.52	7.26	12.10	8.54	11.16	9.71	10.60	10.58
	GQH090PD4COX	14	17.03	7.45	17.10	8.20	14.25	9.65	13.14	10.97	12.48	11.96
	GQH096PD4COX	16	18.78	8.46	18.86	9.32	15.72	10.97	14.49	12.47	13.77	13.59
SST -15 °C	GQH066PS4COX	9	14.73	5.82	13.74	6.34	12.98	7.41	11.81	8.30	9.61	8.87
	GQH076PD4COX	12	16.91	7.23	16.62	7.82	14.74	8.92	13.95	10.00	13.25	10.90
	GQH090PD4COX	14	19.91	8.17	19.57	8.84	17.35	10.09	16.43	11.30	15.61	12.32
	GQH096PD4COX	16	21.96	9.28	21.58	10.04	19.14	11.46	18.12	12.84	17.21	14.00
SST -10 °C	GQH066PS4COX	9	17.45	6.08	16.72	6.63	15.84	7.68	14.41	8.37	11.34	9.19
	GQH076PD4COX	12	19.36	7.86	18.71	8.38	17.51	9.44	16.75	10.29	15.91	11.21
	GQH090PD4COX	14	22.79	8.89	22.03	9.47	20.62	10.67	19.72	11.63	18.73	12.67
	GQH096PD4COX	16	25.14	10.10	24.30	10.76	22.74	12.12	21.75	13.21	20.66	14.40
SST -5 °C	GQH066PS4COX	9	20.74	6.41	19.93	6.93	19.03	7.98	17.31	8.86	14.42	9.55
	GQH076PD4COX	12	23.49	8.00	22.28	8.86	20.91	9.86	20.29	11.80	19.28	12.87
	GQH090PD4COX	14	27.65	9.05	26.23	10.01	24.62	11.14	23.89	13.34	22.70	14.54
	GQH096PD4COX	16	30.50	10.28	28.93	11.38	27.15	12.66	26.35	15.16	25.03	16.52
SST 0 °C	GQH066PS4COX	9	24.06	6.89	23.22	7.45	22.40	8.43	20.38	10.12	16.70	11.09
	GQH076PD4COX	12	26.71	8.56	26.16	9.41	24.67	10.46	23.83	13.32	22.64	14.52
	GQH090PD4COX	14	31.45	9.67	30.81	10.63	29.05	11.83	28.06	15.06	26.66	16.41
	GQH096PD4COX	16	34.69	10.99	33.98	12.08	32.04	13.44	30.95	17.11	29.40	18.65
SST 5 °C	GQH066PS4COX	9	28.00	7.23	26.77	7.93	25.87	8.87	23.53	10.64	19.29	11.62
	GQH076PD4COX	12	31.37	9.16	30.32	10.00	28.54	11.16	27.16	14.84	25.80	16.18
	GQH090PD4COX	14	36.94	10.35	35.71	11.30	33.60	12.61	32.34	16.77	30.72	18.28
	GQH096PD4COX	16	40.74	11.76	39.38	12.84	37.06	14.33	35.87	19.06	34.08	20.78

Notes: the variable condition data is based on the national standard GB/T 21363 requirements, return temperature 18° C.