CARRIER® PARAGON 06T SEMI-HERMETIC TWIN SCREW COMPRESSOR

TS, TT, TU, TV

Haier Carrier

Haier Carrier Refrigeration Equipment Co., Ltd. (Haier Carrier) is a joint venture established by Haier Group and US Carrier in 2001. After more than ten years of development, it has become one of the plants using the same technologies as the Carrier HQ. Its products include supermarket display cabinets, compressor units and inverter condensing units(scroll, reciprocating and screw), and heat exchangers(air-cooled condenser and air cooler). It can provide customers with whole sets of frozen and chilled solutions. Relying on the support of Carrier' s R&D centers in Mainz, Germany and Shanghai, China, the company now has several nationally recognized laboratories, and by constantly updating its products and system technologies, Haier Carrier is committed to providing its customers with CO2OLtec transcritical system and other advanced energy conservation and environmental protection systems.

In the past ten years, relying on abundant resources of the parent company, Haier Carrier has become a world-class facility that owns the IS0 9001, IS0 14001 certifications, the ACE certification of United Technologies(Carrier' s parent) and other certifications. With strong R&D strength, Haier Carrier is able to provide world-class freezing and refrigerating integrated solutions such as D2D hot gas defrosting (national patent), supermarket cold chain and air-conditioner association system, refrigeration and hot water association system, Cascade CO_2 (carbon dioxide cascade refrigeration technology), and CO2OLtec(carbon dioxide transcritical refrigeration technology).

About Carrier

Carrier Global Corporation is a leading global provider of innovative heating, ventilating and air conditioning (HVAC), refrigeration, fire, security and building automation technologies. Supported by the iconic Carrier name, the company is committed to making the world safer and more comfortable for generations to come through its industryleading brands such as Carrier, Kidde, Edwards, LenelS2 and Automated Logic. For more information, visit www.Corporate.Carrier.com or follow us on social media at @Carrier.

In 1998, Dr. Carrier was voted one of the 20 "building greats" among the 100 most influential people of the 20th century in a selection held by the "Time" magazine in the United States.

Contents

Company Profile 2

Products Features 4

Compressor Displacement 6

Naming Rules 6

Operating Range 7

Performance Parameter 8

- R134a Air-cooled - With Economizer 8
- Air-cooled - With Economizer 9
- R22 Low Temperature Refrigeration - With Economizer 10
- R404A Low Temperature Refrigeration - With Economizer 11
- R22/R404A Medium Temperature Refrigeration - With Economizer 12

Technical Data 13

- R134a Air-cooled 13
- R22/R404A Refrigeration 14

Electrical Connection 14

Optional Accessories 15

Dimensions and Weight 15

Appearance and Connection 16

- 06TS 16
- 06TT 17
- 06TU 18
- 06TV 19

Carrier Compressors 20

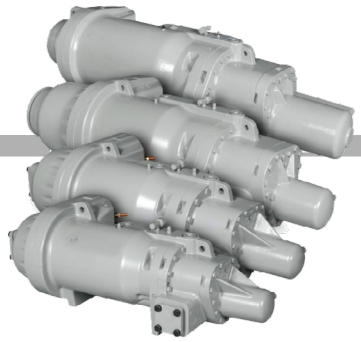

Carrier Compressor

Every day, Carrier compressors work quietly and efficiently in many corners all over the world. No matter in supermarkets, data rooms, manufacturing plants, or on the oceans or roads, Carrier compressors continuously meet and transcend challenges posed by harsh environments, and provide the world's most reliable refrigeration technology.

Carrier compressors' optimal design makes them more reliable and durable. Even under severe application environments with frequent occurrence of extreme conditions, the failure rate in the first year is only 0.29%.

Carrier compressors also have higher performance. 06T series semi-hermetic twin screw compressors can be used in high, medium and low temperature applications, compatible with all standard refrigerants and lubricants, and their wide operating range make them suitable for various applications.

Carrier's world-leading technology and inapproachable efficiency can save you a large quantity of energy consumptions and costs.during the compressor's life cycle.

PARAGON™
TWIN SCREW COMPRESSORS

PARAGON™ TWIN SCREW COMPRESSOR

Unmatched Performance and Trustworthy Design

Unique quality
- 35-200Rton (50Hz, without economizer)
- R134a/R22/R404A refrigerant
- Air conditioning or refrigeration conditions Efficient patented geometric design
- The world's leading processing technology

Perfect load matching
- Stepless capacity control 100%~15%
- Vi optimization at partial load
- Simple dual-solenoid valve control

Reliable SKF or NSK rolling bearings
- Good sealing to reduce load
- Long service life, no need to check and replace during maintenance
- Powerful thrust bearing design
- No need for oil pump.

Superior quality and reliability
- 100% factory tested
- Fewer parts - less chance of breaks and downtime
- "33 points" process inspection

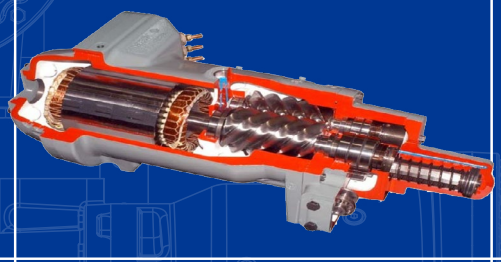

Built-in one-way valve and safety valve
- Built in one-way valve effectively to prevent rotor wear caused by reverse rotation during shutdown
- Safety valve to effectively ensure the safe operation of the compressor

High strength motor
- Y- △ Conversion start or direct start
- High motor efficiency
- Suction inlet with screen
- Thermal protection integrated NTC winding sensor
- Sliding fit to improve motor applicability
- Applicable to all standard voltages

Higher efficiency
- Paragon's whole series can realize the operation of economizer
- A variety of compressors are available for dual control and regulating capacity of frequency conversion and slide valve, which makes operation more energy-saving

Easy maintenance & installation
- Semi-hermetic design
- Easy to assemble and disassemble
- External oil filter, long service life, easy to replace
- Preset oil system management accessories

Efficient. Reliable. Durable

5

Compressor Capacity Compressor Sisplacement

风冷系列 (R22/R404A)				
Model	@60Hz			Displacement (m^3/h @50Hz)
	HP	CFM	RT	
06TSA137	60	137	44	190
06TSA155	75	155	50	215
06TSA186	75	186	59	258
06TTA266	120	266	86	369
06TTA301	150	301	101	418
06TTA356	150	356	120	494
06TUA483	225	483	165	670
06TUA554	225	554	185	769
06TVA680	340	680	228	944
06TVA753	340	753	252	1045
06TVA819	340	819	275	1137

Low Temperature Refrigeration Series (R22/R404A)				
Model	@60Hz			Displacement (m^3/h @50Hz)
	HP	CFM	RT	
06TSR137	60	137	19	190
06TSR155	75	155	21	215
06TSR186	75	186	25	258
06TTR266	120	266	39	369
06TTR301	150	301	46	418
06TTR356	150	356	54	494

Medium Temperature Refrigeration Series (R22/R404A)				
Model	@60Hz			Displacement (m^3/h @50Hz)
	HP	CFM	RT	
06TSM137	75	137	30	190
06TSM155	75	155	32	215
06TTM266	150	266	63	369
06TTM301	150	301	70	418
06TUM483	225	483	132	670
06TVM680	340	680	158	944

Naming Rules

Digit	1	2	3	4	5	6	7	8	9	10	11	12
Model	0	6	T	T	A	3	5	6	S	S	1	C

1& 2	DESIGN FEATURE
06	Semi-Hermetic

3& 4	MODEL CODE
TS	Paragon
TT	Paragon
TU	Paragon
TV	Paragon

5	DESIGN VARIABLE
A	Air-Cooled Vi
W	Water-Cooled Vi
R	Low Temperature Vi
M	Medium Temperature Vi
X	Variable-Speed (WC Vi)

6、7 & 8	
DISPLACEMENT (CFM@60Hz)	MODEL
137	TS1
155	TS2
186	TS3
266	TT1
301	TT2
356	TT3
483	TU2
554	TU3
680	TV1
753	TV2
819	TV3
879	TV4
13K	TX1
14K	TX2
15K	TX3

9	VOLTAGE (V)-PHASE-FREQUENCY (Hz)	
S	400/460-3-50/60	690-3-50(Y)
T	575-3-60	
W	380-3-60	690-3-60(Y)
X	200/230-3-50/60	

10	HP@60Hz	HP@50Hz
G	60	50
J	75	63
M	90	75
P	120	100
S	150	125
T	160	133
W	225	188
X	340	283
Y	416	347

11	DESIGN LEVEL
1	阶段 1
3	变型
9	未使用

12	PACKAGE / ACCS.
C	板状
D	条装

Symbols explanation
Vi——Volume ratio
CFM——Cubic feet per minute

Operating Envelopes Operating Range

R134a Air Cooling

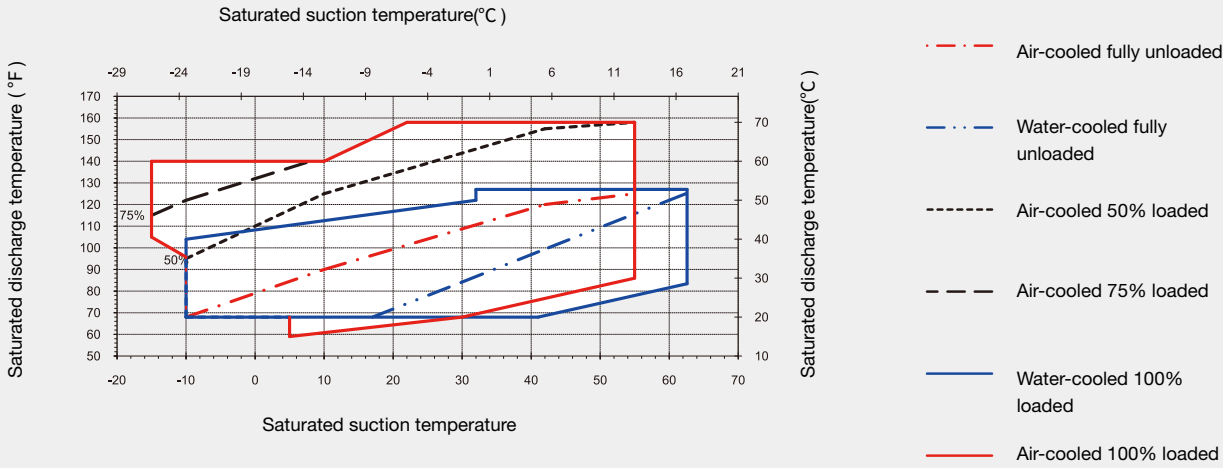

R22 Low Temperature Refrigeration

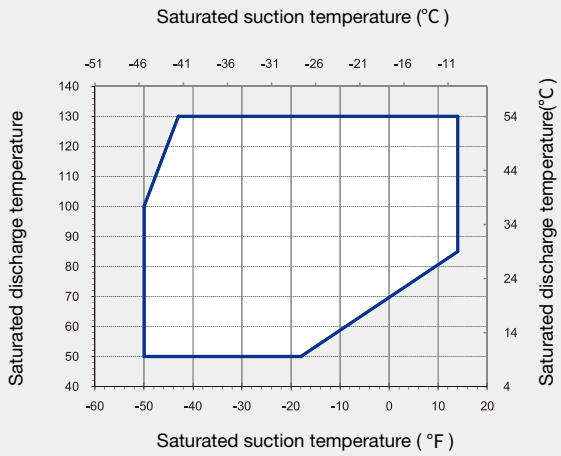

R404A Low Temperature Refrigeration

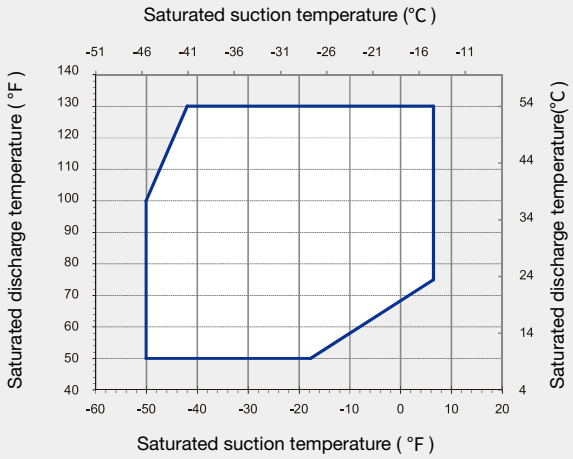

R22/R404A Medium Temperature Refrigeration

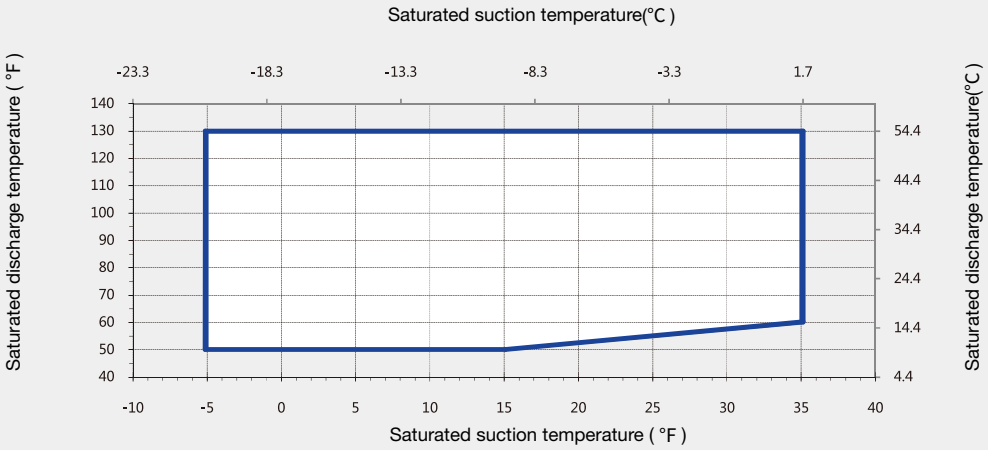

Performance Data

R134a Air-cooled - Without Economizer

50Hz，degree of superheat 10℃，degree of subcooling 0℃

Model	Condensing temperature (℃)	Q(kW) / P(kW)	Evaporating temperature(℃) -15	-10	-5	0	5	10
06TSA137	30	Q	58.6	73.4	91.0	111.6	135.3	162.1
		P	20.1	20.9	21.8	22.8	23.9	25.2
	40	Q	51.6	64.8	80.6	99.2	120.5	144.8
		P	23.9	24.7	25.6	26.6	27.8	29.1
	50	Q	43.8	55.5	69.4	85.9	105.0	126.8
		P	28.7	29.5	30.4	31.5	32.7	34.0
	60	Q	35.7	45.7	57.8	72.2	89.0	108.2
		P	34.5	35.3	36.3	37.3	38.6	39.9
06TSA155	30	Q	66.1	84.2	104.7	127.8	153.7	182.3
		P	22.0	23.0	24.2	25.4	26.7	28.0
	40	Q	57.8	74.0	92.6	113.6	137.1	163.2
		P	26.3	27.4	28.6	29.8	31.1	32.5
	50	Q	48.1	62.6	79.1	97.9	119.0	142.6
		P	32.0	33.1	34.3	35.6	36.9	38.3
	60	Q	37.8	50.3	64.7	81.2	99.9	120.7
		P	39.0	40.1	41.3	42.6	43.9	45.3
06TSA186	30	Q	77.1	97.7	121.3	148.1	178.1	211.5
		P	25.5	26.6	27.8	29.0	30.3	31.6
	40	Q	67.6	86.2	107.6	131.9	159.3	189.8
		P	31.0	32.2	33.4	34.7	36.1	37.4
	50	Q	56.9	73.5	92.6	114.4	139.0	166.5
		P	37.9	39.2	40.5	41.8	43.2	44.7
	60	Q	-	60.0	76.7	95.9	117.7	142.1
		P	-	47.6	49.0	50.4	51.9	53.4
06TTA266*	30	Q	116.4	148.9	185.9	227.4	273.7	324.9
		P	39.1	41.0	43.1	45.5	48.0	50.8
	40	Q	103.7	133.1	166.6	204.4	246.6	293.4
		P	46.3	48.1	50.2	52.5	55.0	57.7
	50	Q	88.7	114.9	144.8	178.8	216.8	259.1
		P	55.6	57.4	59.4	61.6	64.0	66.6
	60	Q	72.3	95.1	121.4	151.3	185.0	222.6
		P	67.0	68.7	70.6	72.7	75.1	77.7
06TTA301	30	Q	129.8	166.6	208.7	256.3	309.7	369.0
		P	42.9	44.9	47.1	49.4	51.9	54.6
	40	Q	114.4	147.6	185.8	229.2	278.0	332.2
		P	51.6	53.6	55.7	58.1	60.5	63.2
	50	Q	96.7	126.3	160.5	199.5	243.4	292.5
		P	62.7	64.6	66.7	69.0	71.5	74.1
	60	Q	77.6	103.5	133.5	167.9	206.8	250.5
		P	76.1	78.0	80.1	82.3	84.8	87.4
06TTA356	30	Q	157.2	200.2	249.2	304.4	366.0	434.1
		P	50.1	52.5	55.3	58.3	61.5	65.1
	40	Q	139.3	178.2	222.7	273.0	329.3	391.7
		P	59.7	62.0	64.6	67.5	70.7	74.1
	50	Q	118.2	153.0	192.8	238.0	288.8	345.3
		P	72.3	74.6	77.1	79.9	82.9	86.2
	60	Q	95.2	125.6	160.6	200.4	245.4	295.7
		p	88.2	90.3	92.7	95.3	98.3	101.5

Model	Evaporating temperature(℃) -15	-10	-5	0	5	10
06TUA483	207.2	265.3	330.8	403.8	484.8	573.8
	67.0	70.9	75.3	80.3	85.9	92.0
	184.6	237.2	296.6	363.2	437.1	518.6
	80.2	83.8	87.9	92.6	97.8	103.6
	159.0	205.9	259.1	319.0	385.7	459.4
	97.6	100.9	104.7	109.1	114.0	119.5
	131.4	172.4	219.2	272.0	331.2	396.8
	119.2	122.1	125.6	129.7	134.3	139.4
06TUA554	238.0	302.1	375.5	458.3	551.0	653.8
	74.3	78.1	82.4	87.2	92.6	98.5
	212.4	270.2	336.6	411.8	496.2	590.1
	89.9	93.4	97.5	102.1	107.2	112.9
	183.1	234.5	293.7	361.2	437.0	521.7
	109.7	112.9	116.7	121.1	125.9	131.3
	151.2	196.0	247.9	307.3	374.4	449.6
	133.5	136.6	140.1	144.2	148.8	153.9
06TVA680	298.4	379.4	471.9	576.5	693.6	823.5
	95.3	101.2	108.0	115.7	124.4	134.1
	266.5	339.7	423.7	518.8	625.6	744.4
	113.9	119.3	125.6	132.9	141.1	150.2
	231.3	296.5	371.6	457.1	553.3	660.7
	137.8	142.7	148.6	155.3	163.0	171.7
	193.6	250.6	316.6	392.1	477.4	573.0
	167.1	171.5	176.9	183.2	190.4	198.6
06TVA753	324.0	406.3	503.7	616.9	746.4	892.8
	100.9	106.3	112.8	120.3	128.8	138.4
	288.2	363.0	451.7	555.1	673.8	808.2
	119.7	125.3	131.8	139.5	148.1	157.9
	248.6	315.6	395.4	488.7	596.0	717.9
	143.4	149.1	155.8	163.6	172.4	182.3
	206.5	265.4	335.8	418.5	514.0	622.9
	172.1	177.9	184.7	192.6	201.6	211.6
06TVA819	352.8	446.6	554.1	676.0	812.7	964.6
	108.3	114.5	121.5	129.5	138.3	148.1
	312.3	397.5	495.5	606.8	732.0	871.4
	131.4	137.0	143.6	151.0	159.3	168.6
	268.2	344.4	432.5	532.9	646.1	772.6
	161.0	166.1	172.1	179.0	186.8	195.6
	221.7	288.6	366.2	455.2	556.0	668.9
	197.2	201.7	207.2	213.6	220.9	229.1

Performance Data (Continued)

R134a Air-cooled - With Economizer

50Hz，degree of superheat 10℃，degree of subcooling 0℃

Model	Condensing temperature (℃)	Q(kW) / P(kW)	Evaporating temperature(℃) -15	-10	-5	0	5	10
06TSA137	30	Q	58.4	73.3	91.1	111.8	135.6	162.6
		P	20.2	20.9	21.8	22.8	23.9	25.2
	40	Q	51.4	64.5	80.3	98.8	120.2	144.5
		P	24.0	24.7	25.6	26.6	27.8	29.2
	50	Q	43.5	55.0	68.8	85.1	104.0	125.7
		P	28.8	29.5	30.4	31.5	32.7	34.1
	60	Q	35.1	44.9	56.8	70.9	87.4	106.3
		P	34.6	35.4	36.3	37.3	38.5	40.0
06TSA155	30	Q	65.6	83.3	103.8	127.0	153.1	182.2
		P	22.0	23.5	24.9	26.1	26.9	27.4
	40	Q	57.2	73.1	91.4	112.4	136.1	162.5
		P	26.4	28.0	29.6	31.2	32.5	33.6
	50	Q	47.3	61.3	77.6	96.2	117.4	141.1
		P	31.9	33.5	35.2	37.1	38.8	40.4
	60	Q	36.6	48.7	62.8	79.1	97.6	118.6
		P	38.3	40.0	41.9	43.9	46.0	48.0
06TSA186*	30	Q	78.4	96.2	118.0	144.2	174.8	210.0
		P	25.5	27.2	28.6	29.7	30.6	31.3
	40	Q	69.1	85.2	105.1	128.9	156.9	189.1
		P	31.0	32.8	34.5	36.2	37.7	39.2
	50	Q	57.8	72.1	89.9	111.3	136.5	165.6
		P	37.7	39.6	41.5	43.5	45.5	47.4
	60	Q	-	57.7	73.2	92.1	114.4	140.2
		P	-	47.7	49.7	51.9	54.1	56.5
06TTA266	30	Q	116.6	148.7	185.2	226.1	271.7	322.0
		P	39.3	41.7	44.3	46.5	48.4	49.8
	40	Q	103.8	132.8	165.9	203.2	244.8	290.8
		P	46.6	49.1	51.8	54.4	56.9	59.2
	50	Q	88.5	114.4	143.9	177.3	214.7	256.3
		P	55.7	58.1	61.0	63.9	66.9	69.7
	60	Q	71.5	94.0	119.9	149.3	182.4	219.4
		P	66.5	69.0	71.9	75.1	78.3	81.6
06TTA301	30	Q	128.7	165.7	208.3	256.7	311.1	371.6
		P	42.2	44.9	47.8	50.7	53.2	55.4
	40	Q	113.6	146.5	184.5	228.0	276.9	331.7
		P	51.0	53.5	56.5	59.6	62.7	65.6
	50	Q	96.5	125.3	158.7	197.1	240.7	289.5
		P	61.9	64.3	67.3	70.5	73.9	77.2
	60	Q	78.1	102.7	131.6	165.0	203.0	245.9
		P	75.0	77.4	80.3	83.6	87.1	90.8
06TTA356	30	Q	156.3	199.2	248.0	302.8	363.9	431.5
		P	51.1	54.2	57.8	61.0	63.8	66.1
	40	Q	138.5	177.2	221.4	271.3	327.0	388.8
		P	60.8	64.1	67.6	71.3	74.7	77.9
	50	Q	117.2	151.6	191.0	235.7	285.8	341.6
		P	73.0	76.3	80.0	84.0	87.9	91.8
	60	Q	93.6	123.5	158.0	197.3	241.6	291.1
		P	87.9	91.2	95.1	99.3	103.6	107.9

Model	Evaporating temperature(℃) -15	-10	-5	0	5	10
06TUA483	205.9	263.7	329.2	402.6	484.2	574.2
	66.8	71.4	76.8	82.0	86.5	89.9
	183.2	235.3	294.5	361.0	435.2	517.2
	79.6	84.1	89.5	95.3	101.1	106.4
	157.5	203.6	256.4	315.9	382.5	456.4
	96.4	100.6	105.8	111.8	118.1	124.5
	129.7	169.8	215.8	268.1	326.9	392.4
	117.1	121.0	126.1	132.0	138.5	145.4
06TUA554	237.5	300.0	372.5	455.5	549.2	654.1
	73.8	78.7	84.0	89.1	93.5	97.2
	212.0	268.2	333.7	408.9	494.2	589.8
	89.3	94.0	99.4	105.1	110.7	116.1
	182.2	232.0	290.4	357.6	434.1	520.2
	108.5	113.0	118.4	124.4	130.6	136.9
	149.5	192.8	243.7	302.8	370.3	446.6
	131.6	135.9	141.1	147.2	153.7	160.6
06TVA680	297.8	377.1	468.2	571.4	687.3	816.2
	92.1	97.5	103.6	110.2	117.5	124.7
	267.0	339.2	422.4	517.0	623.4	741.9
	110.8	115.9	121.6	128.0	135.2	143.3
	229.7	294.6	369.5	455.0	551.4	659.1
	134.6	139.2	144.6	150.7	157.6	165.4
	188.1	245.1	311.3	387.1	473.0	569.3
	163.6	167.8	172.7	178.4	185.0	192.5
06TVA753	323.7	405.0	501.6	614.4	743.8	890.5
	101.2	106.5	112.7	120.1	128.6	138.4
	287.1	361.3	449.9	553.3	672.3	807.4
	120.0	125.4	131.8	139.2	147.9	157.9
	248.6	315.5	395.6	489.3	597.4	720.4
	143.7	149.2	155.7	163.4	172.2	182.3
	208.8	268.0	339.1	422.6	519.3	629.6
	172	178	185	193	202	212
06TVA819	323.7	405.0	501.6	614.4	743.8	890.5
	101.2	106.5	112.7	120.1	128.6	138.4
	287.1	361.3	449.9	553.3	672.3	807.4
	120.0	125.4	131.8	139.2	147.9	157.9
	248.6	315.5	395.6	489.3	597.4	720.4
	143.7	149.2	155.7	163.4	172.2	182.3
	208.8	268.0	339.1	422.6	519.3	629.6
	172.4	178.1	184.8	192.5	201.5	211.8

Performance Data (Continued)

R22 Low Temperature Refrigeration - With Economizer 50Hz，degree of superheat 10℃，degree of subcooling 0℃

Model	Condensing temperature (℃)	Q(kW) / P(kW)	Evaporating temperature(℃) -45	-40	-35	-30	-25	-20	-15	Model	Evaporating temperature(℃) -45	-40	-35	-30	-25	-20	-15
06TSR137	20	Q	33.2	43.9	56.3	70.3	85.7	102.4	-	06TSR155	37.3	48.1	60.8	75.3	91.4	109.1	-
		P	21.0	22.1	23.5	24.9	26.5	28.2	-		24.8	25.8	27.1	28.5	30.2	32.0	-
	25	Q	32.1	42.3	54.2	67.6	82.4	98.5	115.7		36.2	46.5	58.8	72.7	88.2	105.2	123.6
		P	22.9	24.1	25.4	27.2	29.0	30.9	32.6		27.2	28.4	28.9	30.6	32.4	34.7	36.6
	30	Q	30.4	40.2	51.6	64.6	78.9	94.5	111.3		34.3	44.4	56.3	69.8	84.8	101.3	119.0
		P	25.2	26.3	27.8	29.4	31.3	33.4	35.3		28.7	29.9	31.2	32.8	34.6	36.7	39.3
	35	Q	28.1	37.5	49.1	61.3	75.3	90.6	107.0		31.8	41.7	53.3	66.5	81.2	97.2	114.5
		P	28.0	29.1	30.6	32.3	34.2	36.3	39.1		31.4	32.6	34.0	35.6	37.4	39.4	41.9
	40	Q	25.1	34.3	45.2	57.6	71.5	86.6	102.9		28.7	38.4	49.8	62.8	77.3	93.1	110.1
		P	31.0	32.2	33.7	35.6	37.6	39.7	41.8		34.3	35.7	37.2	38.8	40.6	42.7	45.1
	45	Q	21.5	30.6	41.3	53.6	67.4	82.5	98.7		25.1	34.7	46.0	58.9	73.2	88.9	105.8
		P	34.0	35.7	37.4	39.4	41.5	43.7	45.8		37.5	39.0	40.6	42.5	44.5	46.7	49.2
	50	Q	-	26.2	36.9	49.2	63.0	86.9	95.1		-	30.5	41.8	54.7	69.1	84.8	101.8
		P	-	39.0	41.4	43.6	45.8	48.4	50.6		-	42.6	44.6	46.7	48.9	51.3	53.9
06TSR186	20	Q	46.3	58.2	71.8	87.0	103.8	121.8	-	06TTR266	69.6	88.6	111.3	137.5	167.1	200.0	-
		P	25.1	26.5	28.1	29.9	31.8	33.8	-		40.9	42.6	43.8	44.7	45.4	45.7	-
	25	Q	44.8	56.5	69.9	84.9	101.5	119.1	137.7		66.7	86.1	108.4	134.2	163.4	195.8	231.1
		P	28.0	29.6	31.1	32.9	34.9	37.2	39.9		44.9	46.9	48.4	49.6	50.5	51.3	51.6
	30	Q	42.8	54.1	67.4	82.4	98.6	116.0	134.4		64.2	82.7	104.7	130.2	158.9	190.8	225.6
		P	31.3	32.8	34.4	36.2	38.3	40.5	43.1		49.5	51.8	53.7	55.2	56.5	57.5	58.3
	35	Q	40.1	51.4	64.5	79.2	95.4	112.7	130.9		60.4	78.6	100.3	125.5	153.8	185.2	219.5
		P	34.6	36.3	37.9	39.7	41.8	44.0	46.4		54.4	57.3	59.7	61.6	63.2	64.6	65.7
	40	Q	63.9	48.3	61.4	76.0	92.0	109.3	127.3		56.0	73.9	95.4	120.2	148.3	179.3	213.1
		P	38.0	39.9	41.7	43.6	45.6	47.8	50.2		60.3	63.5	66.2	68.7	70.9	72.6	73.9
	45	Q	33.9	44.9	57.8	72.4	88.5	105.7	123.9		51.0	68.7	90.0	114.6	142.4	173.2	206.6
		P	41.4	43.6	45.8	47.8	49.9	52.1	54.5		67.0	70.6	73.9	76.8	79.3	81.4	82.9
	50	Q	-	41.3	54.1	68.6	84.7	102.1	120.5		-	63.2	84.4	108.9	136.6	167.2	200.4
		P	-	47.5	50.1	52.4	54.6	57.0	59.5		-	78.8	82.3	85.6	88.5	91.0	92.8
06TTR301	20	Q	80.4	101.6	127.2	155.9	187.8	222.6	-	06TTR356	94.7	118.8	147.4	180.0	216.5	256.5	-
		P	45.2	47.4	49.3	50.9	52.6	54.3	-		50.6	53.7	56.9	60.0	63.3	66.5	-
	25	P	77.9	99.9	124.9	153.5	185.1	219.7	256.7		93.1	116.9	145.1	177.4	213.5	253.0	295.6
		Q	49.4	52.1	54.2	56.2	58.1	60.0	62.2		55.8	58.9	62.4	66.0	69.4	72.4	76.1
	30	P	75.9	97.0	122.0	150.3	181.8	216.1	252.9		90.6	114.1	142.0	174.0	209.7	249.3	291.0
		Q	54.0	57.0	59.6	62.0	64.3	66.5	68.9		61.4	64.7	68.4	72.3	76.2	79.7	83.5
	35	P	72.4	93.5	118.3	146.6	178.0	212.1	248.7		87.6	110.8	138.3	170.0	205.4	244.2	286.0
		Q	58.8	62.5	65.6	68.5	71.2	73.8	76.3		67.4	70.8	74.6	78.9	83.2	87.5	91.2
	40	Q	68.3	89.3	114.1	142.3	173.7	207.8	244.2		84.0	106.9	134.2	165.6	201.0	239.3	280.7
		P	64.4	68.5	72.2	75.7	78.9	81.9	84.6		74.0	77.5	81.5	85.9	90.6	95.5	100.1
	45	Q	63.6	84.6	109.4	137.7	169.2	203.4	239.9		78.0	100.0	126.2	156.5	190.6	227.5	267.4
		P	70.9	75.4	79.7	83.7	87.4	90.8	93.7		81.1	84.6	88.7	93.3	98.4	103.8	109.1
	50	Q	-	79.5	104.5	133.0	164.7	199.2	236.0		-	98.6	125.3	156.3	191.1	229.5	270.8
		P	-	83.2	87.9	92.4	96.7	100.5	103.8		-	92.3	96.4	101.1	106.3	112.1	118.2

R404A Low Temperature Refrigeration - With Economizer 50Hz，degree of superheat 10℃，degree of subcooling 0℃

Model	Condensing temperature (℃)	Q(kW) / P(kW)	Evaporating temperature(℃) -45	-40	-35	-30	-25	-20	-15	Model	Evaporating temperature(℃) -45	-40	-35	-30	-25	-20	-15
06TSR137	20	Q	37.9	49.8	63.4	78.7	95.5	114.0	-	06TSR155	42.0	54.3	68.5	84.6	102.5	122.2	-
		P	26.5	27.7	28.9	30.1	31.4	32.7	-		28.6	30.0	31.5	33.2	34.9	36.8	-
	25	Q	36.6	47.8	60.7	75.2	91.3	108.9	127.9		40.6	52.1	65.8	81.1	98.2	117.1	137.5
		P	28.4	29.8	31.2	32.7	34.3	35.9	37.5		31.0	32.5	33.2	35.1	37.2	39.5	41.7
	30	Q	34.6	45.2	57.5	71.4	86.8	103.6	121.8		38.5	49.6	62.6	77.3	93.7	111.7	131.2
		P	30.9	32.3	33.8	35.3	37.0	38.8	40.8		32.5	34.0	35.7	37.6	39.6	41.9	44.4
	35	Q	32.0	42.1	54.3	67.1	81.9	98.1	115.6		35.9	46.5	58.9	73.0	88.7	106.0	124.8
		P	34.0	35.5	37.2	38.7	40.4	42.3	44.3		35.6	37.2	38.9	40.9	43.0	45.2	47.7
	40	Q	28.8	38.4	49.7	62.5	76.7	92.2	109.1		32.6	42.8	54.8	68.3	83.5	100.1	118.1
		P	37.8	39.3	40.9	42.6	44.5	46.5	48.6		39.4	41.0	42.9	44.9	47.0	49.4	52.0
	45	Q	24.9	34.1	45.0	57.3	71.0	86.1	102.3		28.7	38.6	50.1	63.2	77.9	93.9	111.3
		P	42.0	43.8	45.4	47.3	49.3	51.4	53.6		43.9	45.6	47.5	49.6	51.9	54.4	57.1
	50	Q	-	29.2	39.7	51.6	64.9	79.5	95.3		-	33.8	45.0	57.7	71.9	87.4	104.2
		P	-	48.4	50.7	52.7	54.8	57.1	59.5		-	51.0	53.0	55.2	57.6	60.2	63.1
06TSR186	20	Q	51.2	64.1	78.9	95.6	113.9	133.7	-	06TTR266	79.1	99.9	124.7	153.4	186.0	222.4	-
		P	29.9	31.8	33.8	35.8	37.9	39.9	-		47.7	49.8	52.0	54.0	55.8	56.8	-
	25	Q	49.7	62.1	76.5	92.6	110.4	129.6	150.0		75.6	95.6	119.6	147.3	178.7	213.8	252.5
		P	32.7	34.8	36.9	39.1	41.3	43.6	46.0		52.7	54.9	57.1	59.3	61.3	62.9	63.7
	30	Q	47.6	59.6	73.5	89.1	106.3	124.9	144.7		71.1	90.5	113.6	140.3	170.6	204.4	241.7
		P	36.0	38.1	40.4	42.7	45.1	47.5	50.0		58.5	60.8	63.1	65.4	67.7	69.7	71.2
	35	Q	45.0	56.5	69.9	85.0	101.7	119.7	138.9		65.9	84.6	106.8	132.6	161.8	194.3	230.1
		P	39.6	41.9	44.3	46.7	49.3	51.9	54.5		65.2	67.5	69.9	72.4	74.9	77.2	79.2
	40	Q	71.8	52.9	65.8	80.5	96.6	114.1	132.7		60.0	78.0	99.5	124.3	152.4	183.7	218.1
		P	43.7	46.1	48.6	51.3	54.0	56.8	59.6		72.7	75.1	77.7	80.3	83.0	85.6	88.0
	45	Q	38.1	48.8	61.3	75.5	91.1	108.1	126.1		53.6	71.0	91.6	115.5	142.5	172.6	205.6
		P	48.2	50.8	53.5	56.3	59.3	62.3	65.3		81.1	83.7	86.4	89.2	92.1	95.0	97.8
	50	Q	-	44.3	56.4	70.1	85.3	101.7	119.2		-	63.5	83.4	106.3	132.3	161.1	192.8
		P	-	56.0	58.9	62.0	65.2	68.4	71.7		-	93.2	96.1	99.1	102.2	105.4	108.6
06TTR301	20	Q	91.4	11.9	142.5	174.0	209.0	247.5	-	06TTR356	106.0	131.8	162.3	197.4	236.9	280.5	-
		P	52.7	55.5	58.4	61.5	64.6	67.5	-		57.6	61.0	64.6	68.2	72.1	76.0	-
	25	P	88.1	111.0	137.8	168.4	202.5	239.9	280.4		102.7	127.7	157.3	191.4	229.6	271.9	317.9
		Q	58.0	60.9	63.9	67.1	70.4	73.7	76.8		63.0	66.4	70.3	74.4	78.3	82.0	86.5
	30	P	84.0	106.2	132.3	162.0	195.2	231.5	270.9		98.5	122.7	151.4	184.4	221.4	262.7	306.8
		Q	63.8	66.9	70.1	73.4	77.0	80.5	84.1		69.0	72.7	76.8	81.2	85.7	89.8	94.3
	35	P	79.0	100.6	126.0	154.9	187.1	222.5	260.8		93.5	116.9	144.6	176.5	212.3	251.8	294.8
		Q	70.4	73.6	77.0	80.5	84.3	88.1	92.0		75.9	79.8	84.1	88.8	93.7	98.5	102.9
	40	Q	73.3	94.3	119.0	147.1	178.5	212.8	250.0		87.8	110.3	137.1	167.9	202.5	240.6	282.0
		P	77.7	81.1	84.6	88.5	92.4	96.6	100.8		83.7	87.7	92.3	97.2	102.5	107.9	113.1
	45	Q	66.9	87.4	111.4	138.7	169.2	202.7	238.8		81.5	103.2	129.0	158.7	192.0	228.7	268.6
		P	85.8	89.3	93.2	97.2	101.5	106.0	110.6		92.4	96.7	101.5	106.7	112.4	118.3	124.2
	50	Q	-	79.9	103.2	129.8	159.5	192.0	227.1		-	95.6	120.4	149.0	181.1	216.4	254.8
		P	-	98.5	102.6	107.0	111.6	116.5	121.5		-	106.7	111.8	117.4	123.5	129.9	136.4

Performance Data (Continued)

R22 Medium Temperature Refrigeration - With Economizer

Model	Evaporating temperature (°C)	Q(kW) / P(kW)	Condensing temperature (°C) -10	-5	0
06TSM137	35	Q	110.9	132.4	156.4
		P	38.5	40.3	42.2
	40	Q	108.5	129.5	153.1
		P	42.2	44.2	46.2
	45	Q	106.1	126.6	149.6
		P	46.4	48.5	50.6
06TSM155	35	Q	117.8	140.0	164.6
		P	44.3	47.3	50.7
	40	Q	114.9	136.7	160.7
		P	48.0	51.0	54.3
	45	Q	112.2	133.3	156.8
		P	52.0	55.2	58.5
06TTM266	35	Q	232.0	274.6	321.5
		P	78.7	84.2	90.3
	40	Q	226.6	269.2	314.9
		P	84.5	90.4	96.3
	45	Q	222.5	263.6	309.1
		P	91.4	97.2	103.4

Model	Evaporating temperature (°C)	Q(kW) / P(kW)	Condensing temperature (°C) -10	-5	0
06TTM301	35	Q	255.8	301.4	352.1
		P	89.3	96.2	104.1
	40	Q	250.6	295.8	345.7
		P	95.6	102.7	110.5
	45	Q	245.2	289.5	338.4
		P	102.6	109.9	117.6
06TUM483	35	Q	434.5	510.1	609.1
		P	144.4	150.1	155.0
	40	Q	424.6	499.3	596.1
		P	161.8	165.2	170.2
	45	Q	416.2	490.5	587.0
		P	185.3	187.2	190.0
06TVM680	35	Q	609.8	717.6	857.3
		P	212.0	218.8	227.8
	40	Q	597.5	704.0	842.4
		P	236.0	240.9	248.3
	45	Q	587.7	692.5	829.1
		P	270.2	270.5	275.0

R404A Medium-temperature Refrigeration - With Economizer

Model	Evaporating temperature (°C)	Q(kW) / P(kW)	Condensing temperature (°C) -10	-5	0
06TSM137	35	Q	122.5	146.2	172.6
		P	45.4	47.0	48.7
	40	Q	118.0	140.9	166.5
		P	50.1	51.8	53.5
	45	Q	113.2	135.3	160.1
		P	55.4	57.2	59.1
06TSM155	35	Q	129.1	153.5	180.4
		P	51.7	54.4	57.3
	40	Q	124.3	147.7	173.8
		P	56.2	59.0	61.8
	45	Q	119.0	141.6	166.6
		P	61.3	64.2	67.1
06TTM266	35	Q	254.7	300.6	351.9
		P	91.5	96.5	102.0
	40	Q	245.0	289.7	340.2
		P	99.0	104.2	109.9
	45	Q	234.7	278.5	326.7
		P	107.	113.1	118.9

Model	Evaporating temperature (°C)	Q(kW) / P(kW)	Condensing temperature (°C) -10	-5	0
06TTM301	35	Q	281.3	332.4	388.3
		P	102.1	108.8	115.8
	40	Q	271.9	320.9	375.2
		P	110.3	116.8	123.7
	45	Q	261.1	308.5	362.0
		P	119.2	125.8	132.8
06TUM483	35	Q	472.6	556.0	662.8
		P	169.4	174.7	178.4
	40	Q	456.1	536.6	641.1
		P	191.8	194.3	198.0
	45	Q	438.3	517.6	619.6
		P	218.9	220.4	223.5
06TVM680	35	Q	663.9	781.4	933.5
		P	248.1	253.6	262.1
	40	Q	641.3	756.6	905.1
		P	279.2	283.3	289.9
	45	Q	617.7	729.2	875.7
		P	319.5	320.0	325.1

Technical Data

R134a Air-cooled - With Economizer

Compressor model	Displacement 60/50Hz CFM (m^3/h)	Connection size (in)			Cooling capacity control	Voltage frequency (+/-%10)	Norminal HP (HP)	Norminal Power (kW)	Norminal Current (A)	Max Current (A)	Locked rotor current (A)	
		Suction	Discharge	Economizer port							Y	△
06TSA137SG1D	137 / 114 (229 / 190)	3-1/8	2-5/8	1-3/8	Stepless adjustment 25%-100%	460-3-60	60	45	89	108	162	505
						400-3-50		37	86	105	160	500
06TSA137XG1D						230-3-60		47	178	217	324	1010
						200-3-50		37	163	198	320	1000
06TSA155SJ1D	155 / 129 (260 / 215)					460-3-60	75	56	100	122	174	545
						400-3-50		47	96	117	170	530
06TSA155XJ1D						230-3-60		56	200	243	348	1090
						200-3-50		47	183	223	340	1060
06TSA186SJ1D	186 / 155 (312/ 258)					460-3-60	75	56	116	141	174	545
						400-3-50		47	112	136	170	530
06TSA186XJ1D						230-3-60		56	233	284	348	1090
						200-3-50		47	213	259	340	1060
06TTA266SP1D	266/221 (446 / 369)	4-1/8	3-1/8			460-3-60	120	89	165	201	298	930
						400-3-50		75	159	194	303	945
06TTA266XP1D						230-3-60		89	330	402	596	1860
						200-3-50		75	303	369	606	1890
06TTA301SS1D	301 / 250 (504 / 418)					460-3-60	150	112	187	228	382	1190
						400-3-50		93	181	220	388	1210
06TTA301XS1D						230-3-60		112	375	457	764	2380
						200-3-50		93	344	419	776	2420
06TTA356SS1D	356 / 296 (596/ 494)					460-3-60	150	112	226	275	382	1190
						400-3-50		93	218	265	388	1210
06TTA356XS1D						230-3-60		112	452	550	764	2380
						200-3-50		93	414	504	776	2420
06TUA483SW1D	483 / 403 (809 / 670)	5	4-1/8	1-5/8		460-3-60	225	168	314	382	578	1800
						400-3-50		140	303	369	587	1828
06TUA483XW1D						230-3-60		168	628	765	1156	3600
						200-3-50		140	576	701	1174	3656
06TUA554SW1D	554 / 462 (928 / 769)					460-3-60	225	168	360	438	578	1800
						400-3-50		140	347	422	587	1828
06TUA554XW1D						230-3-60		168	720	877	1156	3600
						200-3-50		140	660	803	1174	3656
06TVA680SX1D	680 / 567 (1133/944)	6	5			460-3-60	340	254	462	562	623	1900
						400-3-50		211	438	533	629	1919
06TVA753SX1D	753/ 628 (1254/418)					460-3-60	340	254	506	616	623	1900
						400-3-50		211	487	593	629	1919
06TVA819SX1D	819/683 (1364/ 1137)					460-3-60	340	254	517	629	623	1900
						460-3-50		211	504	614	629	1919

Technical Data (Continued)

R404A 中温冷冻 - 带经济器

Compressor model	Displacement 60/50Hz CFM (m^3/h)	Connection size (in)			Cooling capacity control	Voltage frequency (+/-%10)	Norminal HP (HP)	Norminal Power (kW)	Norminal Current (A)	Max Current (A)	Locked rotor current (A)	
		Suction	Discharge	Economizer port							Y	△
06TSR137SG1D	137 / 114 (229 / 190)	3-1/8	2-5/8	1-3/8	Stepless adjustment 25%-100%	460-3-60	60	45	101	123	162	505
						400-3-50		37	98	119	160	500
06TSR137XG1D						230-3-60		45	203	247	324	1010
						200-3-50		37	186	226	320	1000
06TSR155SJ1D	155 / 129 (260 / 215)					460-3-60	75	56	108	131	174	545
						400-3-50		47	119	145	170	530
06TSR155XJ1D						230-3-60		56	217	264	348	1090
						200-3-50		47	227	276	340	1060
06TSR186SJ1D	186/155 (312 / 258)					460-3-60	75	56	124	151	174	545
						400-3-50		47	120	146	170	530
06TSR186XJ1D						230-3-60		56	249	303	348	1090
						200-3-50		47	227	276	340	1060
06TTR266SP1D	266 / 221 (446 / 369)					460-3-60	120	89	190	231	298	930
						400-3-50		75	183	223	303	945
06TTR266XP1D						230-3-60		89	380	463	596	1860
						200-3-50		75	349	425	606	1890
06TTR301SS1D	301 / 250 (504 / 418)	4-1/8	3-1/8			460-3-60	150	112	210	256	382	1190
						400-3-50		93	203	247	388	1210
06TTR301XS1D						230-3-60		112	421	513	764	2380
						200-3-50		93	386	470	776	2420
06TTR356SS1D	356 / 296 (596 / 494)					460-3-60	150	112	238	290	382	1190
						400-3-50		93	229	279	388	1210
06TTR356XS1D						230-3-60		112	475	578	764	2380
						200-3-50		93	435	530	776	2420

Technical Data (Continued)

R22/R404A Refrigeration

Compressor model	Displacement 60/50Hz CFM (m^3/h)	Connection size (in)			Cooling capacity control	Voltage frequency (+/-%10)	Norminal HP (HP)	Norminal Power (kW)	Norminal Current (A)	Max Current (A)	Locked current
		Suction	Discharge	Economizer port							Y
06TSM137SG1D	137 / 114 (229 / 190)	3-1/8	2-5/8	1-3/8	Stepless adjustment 25%-100%	460-3-60	60	45	101	123	162
						400-3-50		37	98	119	160
06TSM137XG1D						230-3-60		45	203	247	324
						200-3-50		37	186	226	320
06TSM155SJ1D	155 / 129 (260 / 215)					460-3-60	75	56	126	153	174
						400-3-50		47	118	144	170
06TSM155XJ1D						230-3-60		56	252	307	348
						200-3-50		47	235	286	340
06TTM266SP1D	266/221 (446 / 369)	4-1/8	3-1/8			460-3-60	150	112	228	278	382
						400-3-50		93	216	263	388
06TTM266XP1D						230-3-60		112	428	521	764
						200-3-50		93	408	497	776
06TTM301SS1D	301 / 250 (504 / 418)					460-3-60	150	112	227	276	382
						400-3-50		93	217	264	388
06TTM301XS1D						230-3-60		112	456	555	764
						200-3-50		93	434	528	776
06TUM483SW4D	483 / 403 (809 / 670)	5	4-1/8	1-5/8		460-3-60	225	168	314	382	578
						400-3-50		140	303	369	587
06TVM680SA4D	680 / 567 (1133 / 944)	6	5			460-3-60	340	254	462	562	623
						400-3-50		211	438	533	629

Electrical Connection

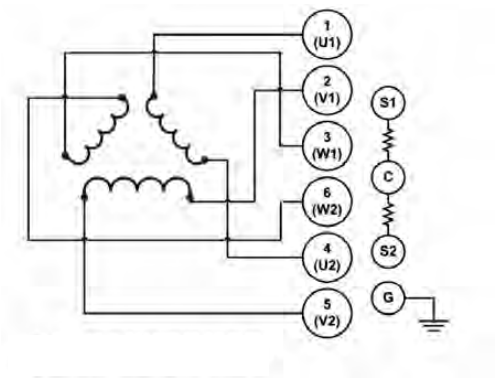

Terminal and sensor pin arrangement

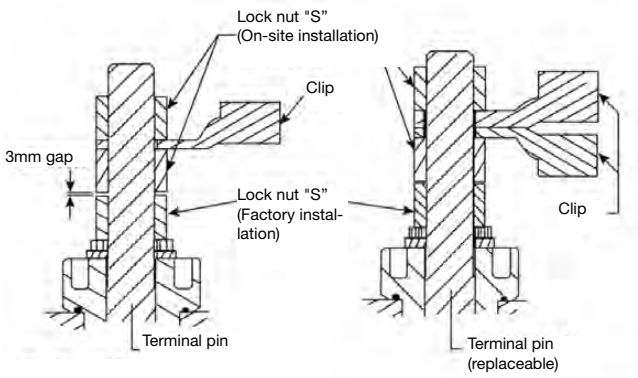

Terminal pin section

Maximum conversion time

Model	Maximum conversion time
TS	0.035
TT	0.055
TU	0.060
TV	0.060

Star-triangle work together to configure the wiring

Links	L1	L2	L3	Union
Start up (star) (5 seconds)	1(U1)	2(V1)	3(W1)	4,5,6(U1,V2,W2)
Operation (triangle)	1.6(U1,W2)	2.4(V1,U2)	3.5(W1,V2)	_

Optional Accessories

Compressor thermal protection module	Paragon control module (PCM)	Other optional accessories

Terminal box
Oil system components
Motor protection device
Capacity control device

- Shutoff valve
- Oil separator
- Flange
- Economizer
- Cooler
- High temperature expansion valve

- *Phase loss, phase error and reverse protection*
- *Discharge temperature and motor temperature protection*
- *Oil level, oil pressure difference and oil flow protection*
- *Exportable data*

- *Capacity control*
- *Oil level, oil flow protection*
- *Discharge temperature and motor temperature control*

Dimensions & Weight

Compressor model	Weight		Connection size					
			Height H		Weight W		Length L	
	lb.	kg	in.	mm	in.	mm	in.	mm
06TS*137	814	369	16	412	19	480	41	1029
06TS*155	830	376	16	412	19	480	41	1047
06TS*186	867	393	16	412	19	480	43	1091
06TT*266	1352	613	19	481	21	536	50	1276
06TT*301	1389	630	19	481	21	536	51	1299
06TT356	1460	662	19	481	21	536	53	1347
06TUM83	2018	915	21	531	23	591	58	1466
06TU*554	2108	956	21	531	23	591	60	1514
06TV*680	2584	1173	23	583	24	608	68	1731
06TV*753	2606	1183	23	583	24	608	68	1731
06TV*819	2623	1191	23	583	24	608	68	1731

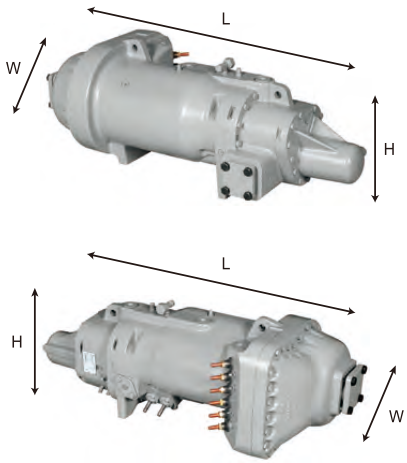

Technical Drawings Appearance and Connection

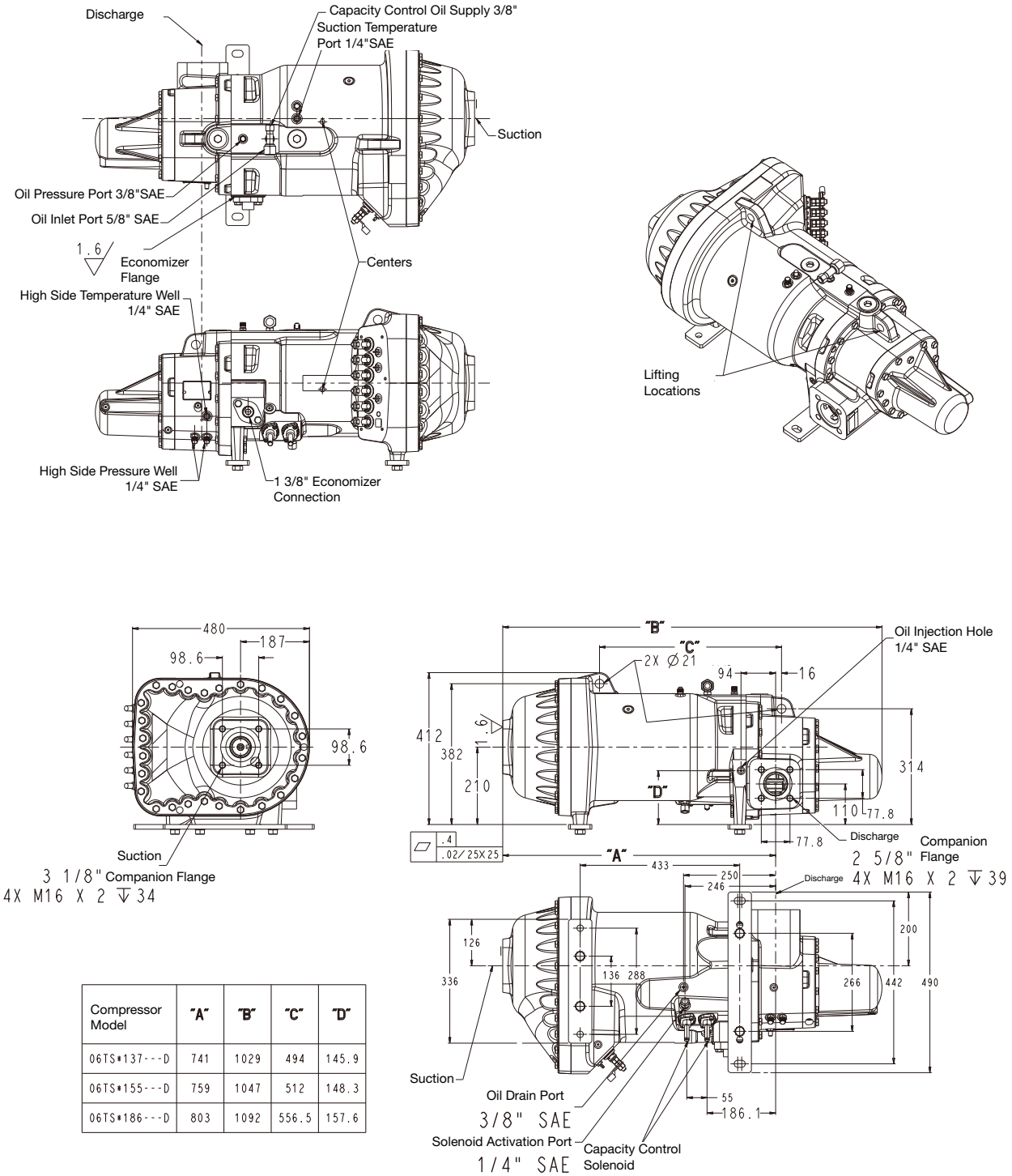

Compressor Model	"A"	"B"	"C"	"D"
06TS*137---D	741	1029	494	145.9
06TS*155---D	759	1047	512	148.3
06TS*186---D	803	1092	556.5	157.6

Figure 2. 06TS compressor physical parameters and connections

Technical Drawings Appearance and Connection (Continued)

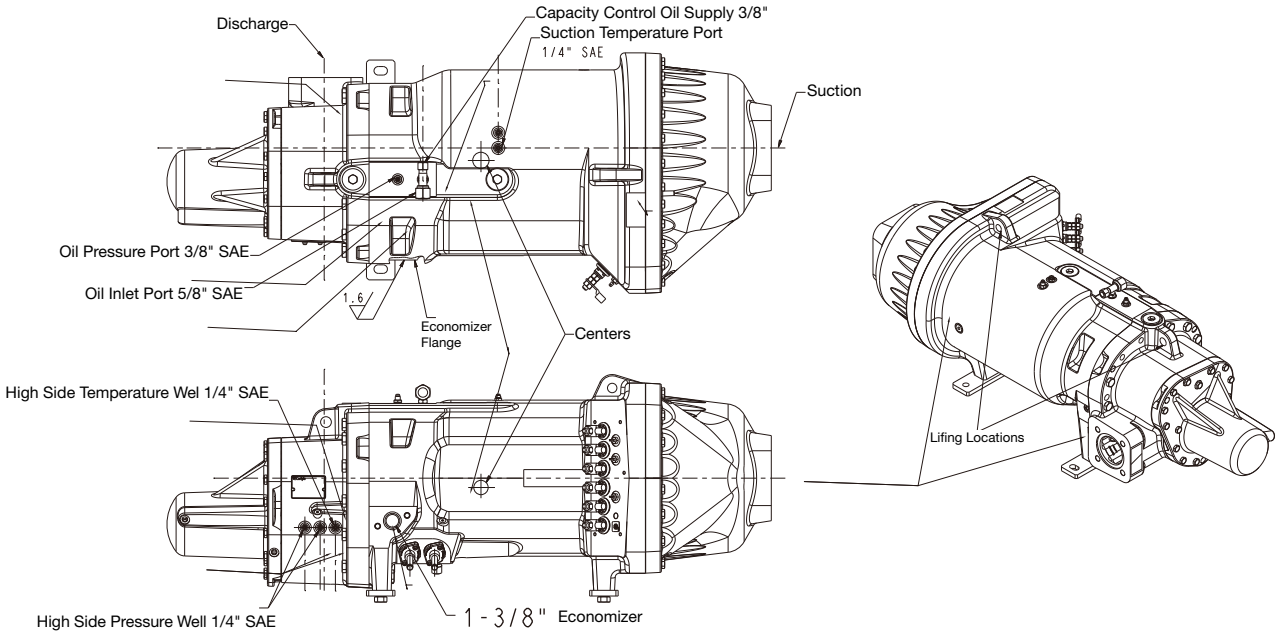

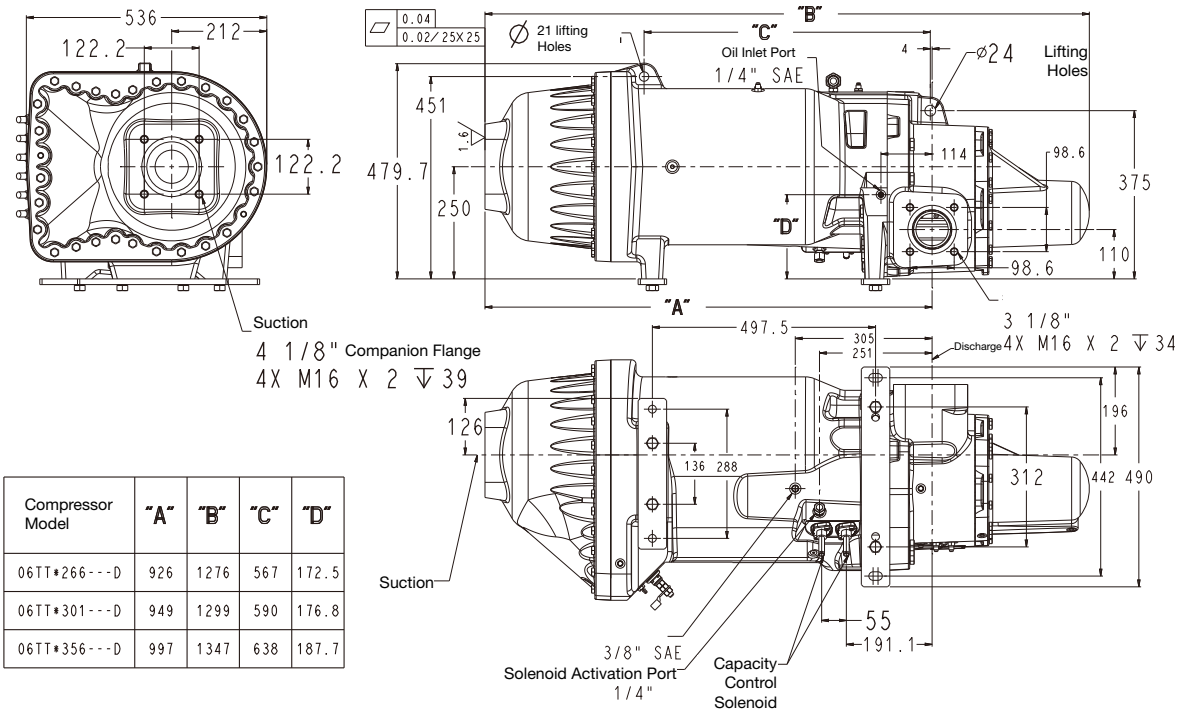

Compressor Model	"A"	"B"	"C"	"D"
06TT*266---D	926	1276	567	172.5
06TT*301---D	949	1299	590	176.8
06TT*356---D	997	1347	638	187.7

Figure 2. 06TT compressor physical parameters and connections

Technical Drawings Appearance and Connection (Continued)

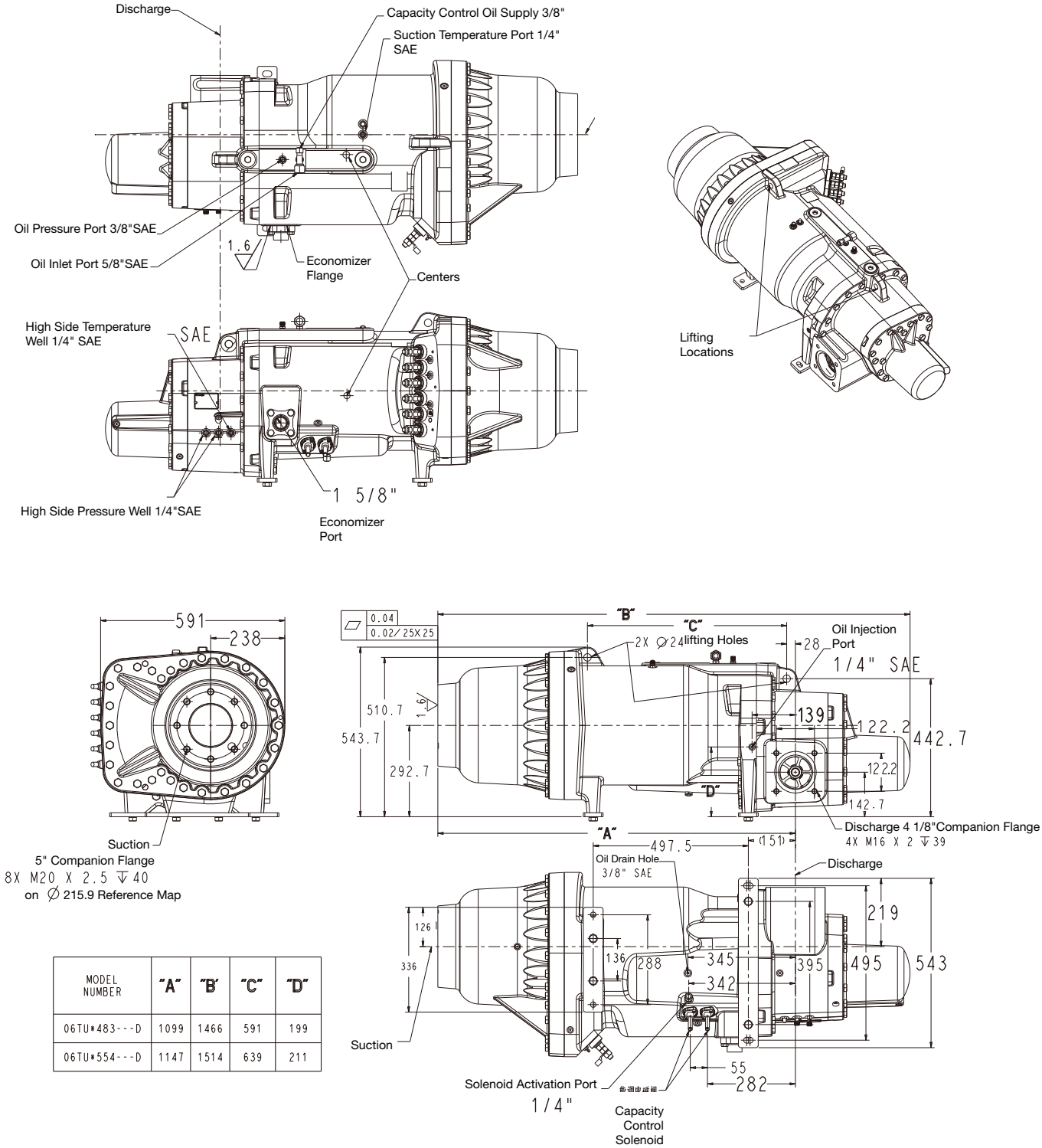

MODEL NUMBER	"A"	"B"	"C"	"D"
06TU*483---D	1099	1466	591	199
06TU*554---D	1147	1514	639	211

Figure 3. 06TU compressor physical parameters and connections

Technical Drawings Appearance and Connection (Continued)

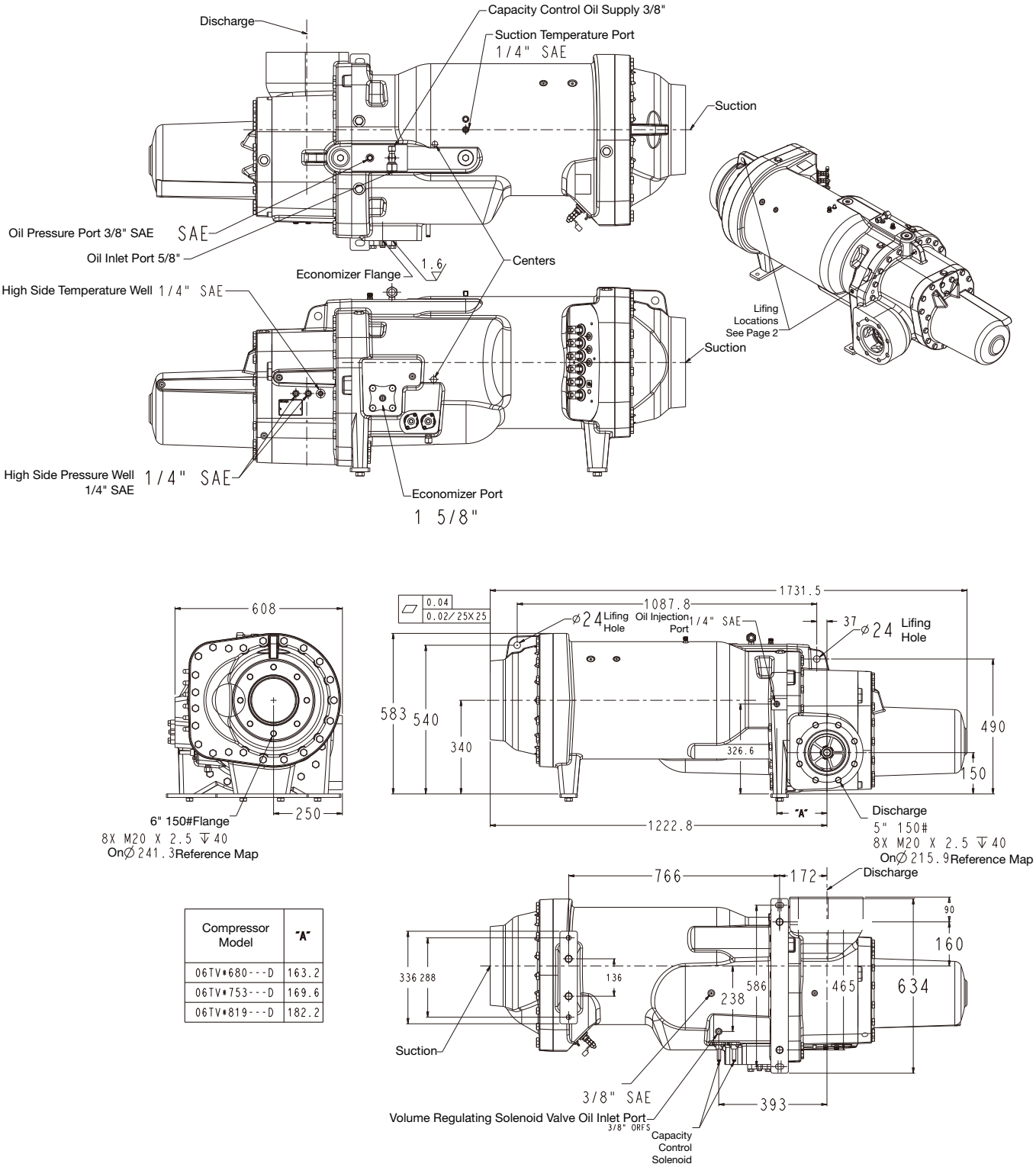

Compressor Model	"A"
06TV*680---D	163.2
06TV*753---D	169.6
06TV*819---D	182.2

Figure 4. 06TV compressor physical parameters and connections

Technical Drawings Appearance and Connection (Continued)

Carrier®Compressors

- Open-style Reciprocating
  - 05K/G series
  - 5F/H series
- Semi-hermetic Reciprocating
  - Two-stage CO2 O6V seres
  - R410A O6M seres
  - R410A O6M seres
  - 06D&E seres
- Semi-hermetic screw
  - Gear drive 06N seres
  - Constant speed / vari-able speed 06T series

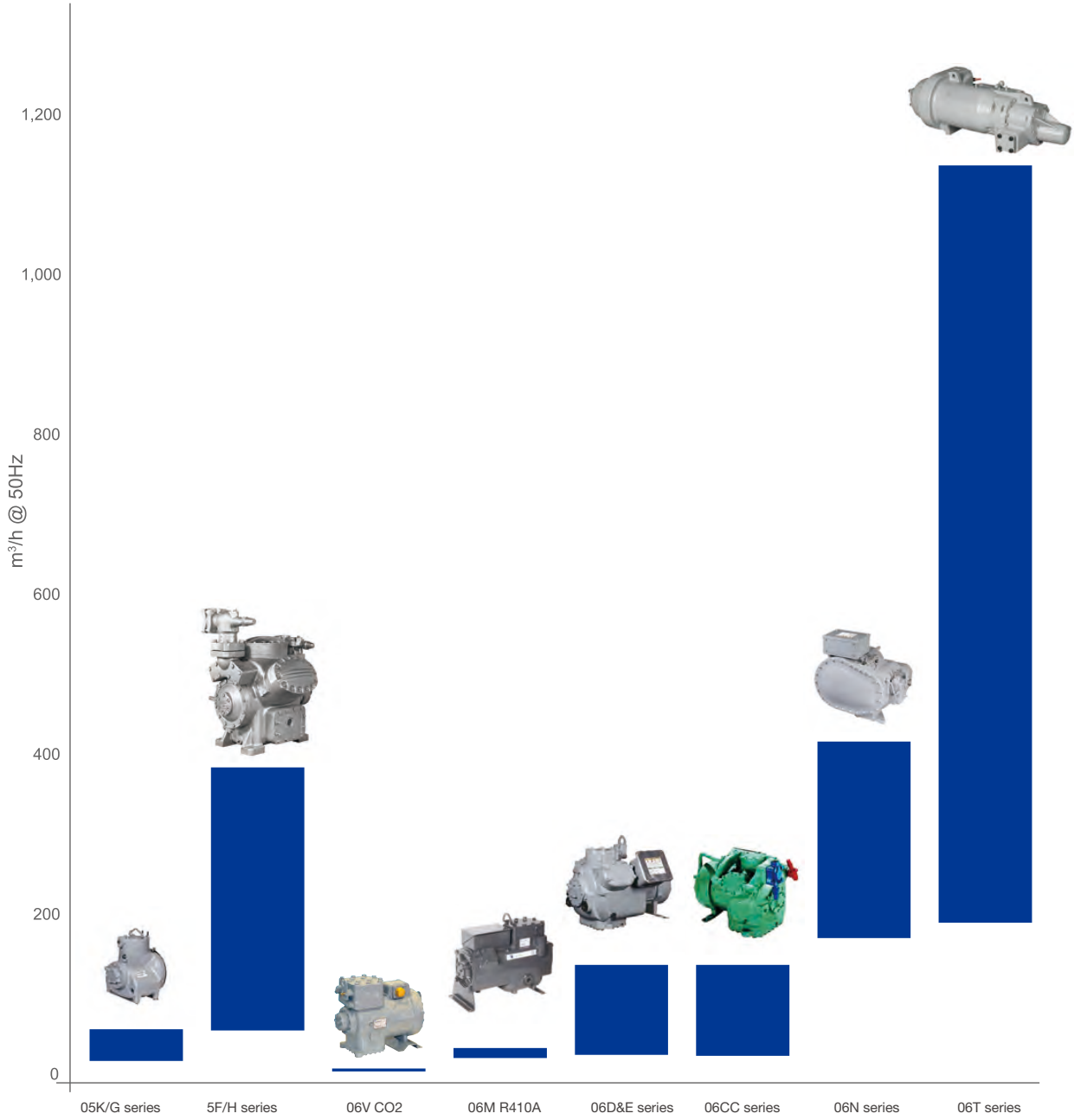

CARRIER COMMERCIAL REFRIGERATION (THAILAND) LTD.
Address: 14th - 15th Floor, Interlink Tower, 1858/63-74 Debaratna Road, Km. 4.5, Bangna Tai, Bangna, Bangkok, 10260, Thailand
Tel: + 66 (0) 2495 8800
Fax: + 66 (0) 2751 4796
http://www.haier-carrier.com/en/

CARRIER AIRCONDITIONING & REFRIGERATION LTD.
Address: Kherki Dhaulan Post, Village Narsinghpur, Gurgaon, Haryana, 122001, India
Hotline: + (91) 124 4825000
Customer care no: 188004254250
http://www.haier-carrier.com/en/

For changes of products and product specifications, there will be no further notification. There may be some difference between the actual products and the pictures. Not all products have all the features listed above. The products delivered vary with regions. Please contact your sales representatives.

© 2020 CARRIER COMMERCIAL REFRIGERATION (THAILAND) LTD.
© 2020 CARRIER AIRCONDITIONING & REFRIGERATION LTD.
CC0003-CA-202002-R01-EN